TOWN OF DAYTON, INDIANA

STUDY AND REPORT

FOR

STORMWATER CAPITAL IMPROVEMENTS PROJECT 1 UPDATE

Prepared by

Butler, Fairman and Seufert, Inc.
Civil Engineers
10 North 3rd Street
Lafayette, IN 47901
Tel.:317-423-5602

TABLE OF CONTENTS

Background

Open Ditch Alternative

Closed Pipe System Alternative

Conclusions and Recommendations

DRAWINGS

Alternative Routes Aerial Plot
Proposed Open Ditch Profiles
Proposed Open Ditch Cross Sections

APPENDICES

A Select Photos of Existing Ditch
B Preliminary Cost Estimates

BACKGROUND

Drainage problems along the east side of Dayton Road near the northwest corner of Prestwick Manor subdivision persist. Corrective action that provides for a long-term solution is desired. The Stormwater Capital Improvement Plan prepared in 2010 recommends such an improvement. The plan included alternatives for discharging stormwater to Wildcat Creek. The alternatives were either modification of an existing open ditch or installation of a new large diameter pipe.

The purpose of the Capital Improvement Plan was to develop a town wide improvement plan for use in establishing a stormwater utility and determining an appropriate rate structure. The purpose of this update is to review the outlet alternatives in more detail and recommend one of the alternatives so that positive steps toward implementing the long-term solution can begin.

The majority of Dayton's highest density developed land, approximately 150 acres, currently drains to the problem area along Dayton Road about 600 feet south of the corporate limit line. For the purpose of this evaluation, the existing open ditch will be considered as beginning (upstream end) at such point along Dayton Road and for practical matters the point will be considered as the location where an existing 42-inch storm pipe discharges from Deerfield Farms into the ditch on the east side of the road. Contour maps suggest that the ditch is fairly flat in the upstream reaches and that the ditch slope increases progressively moving downstream. This is consistent with reported problems associated with stormwater drainage in the area.

Both the original evaluation and this update are based upon GIS contour data available through Tippecanoe County. A field visit was conducted in May 2015 to examine the existing conditions and verify that the contour data reasonably represents the actual situation. Site photos from the field visit are included as appendices to this report.

OPEN DITCH ALTERNATIVE

The existing ditch flows from Dayton Road in a northeast direction for about 750 feet then turns northward and heads toward County Road 200 South for about 2,400 feet. This

estimated 3,150 foot route is the existing path for stormwater discharge in the basin. Mapping from the early 1980's indicates that the channel previously discharged directly into the Wildcat Creek. Since then, a gravel pit has been installed at the downstream end of the channel adjacent to the creek. The gravel pit no longer exists at this location but a reasonably large lake has been left in its place. The lake is known as Coffin Lake and it appears to be privately owned. The lake has a spillway that overflows to the creek. It is believed that there are two culverts within the existing ditch flowline. The first culvert is a 24-inch diameter reinforced concrete pipe approximately 250 feet north of the point where the ditch turns to head north. The second is a 60-inch diameter corrugated metal pipe approximately 2,100 feet north of the same point.

The limiting conditions of the existing ditch are its lack of fall and shallow depth in the upstream reaches. Analysis for this alternative suggests that the ditch work would need to take place from Dayton Road and extend about 1,300 feet downstream to a point where the new ditch slope would match with the progressive increase in slope and depth of the existing ditch. The Capital Improvement Plan proposed a ditch cross-section with a 5 foot flat bottom and minimum side slopes of 2:1 (H:V). This cross section is sufficient but not necessarily required. For the basis of this review, the cross-section was updated to have minimum side slopes of 3:1 (H:V). The additional depth required in the 1,300 foot run noted above is estimated to vary between 2 and 5 feet depending on existing ground conditions at specific locations throughout the reach. This is a significant deviation from the original plan and results from eliminating the intent to install large diameter storm sewer for the upstream 750 feet of the project. The existing 24-inch culvert will need to be replaced as it is a restriction to flow in the channel and likely would not be deep enough to support the needed channel excavation. It appears that the 60-inch culvert carrying the ditch near Coffin Lake, and the spillway from Coffin Lake will not require any improvements at this time.

Currently, the ditch is not part of the Tippecanoe County legal drain system and there are no known private easements allowing maintenance activity to take place. It is recommended that the Town acquire such an easement in perpetuity. Review of Tippecanoe County's GIS parcel information indicates as many as 12 landowners could

be involved in the easement acquisition. The farm fields in the upstream reaches are listed as being owned by Stanley W. Bull and will be the most impacted lands adjoining the project. The estimated construction cost for this alternative is approximately $825,000.00.

CLOSED PIPE SYSTEM ALTERNATIVE

This option was developed during preparation of the Capital Improvement Plan because of concern about the extended length of the open ditch and the amount of area that would need to be cleared in order to complete the project under the open ditch alternative. This alternative would follow the existing ditch alignment from Dayton Road to the point where the ditch turns to head north. At that point, the closed pipe alternative heads east along the north line of the Prestwick Manor subdivision for about 800 feet before turning north and running another 950 feet to Wildcat Creek.

This alternative will reduce the tree impact but requires an additional length of construction as compared to the open ditch alternative. Also an outlet along the bank of Wildcat Creek will need to be constructed. Due to the highly erosive nature of the creek the outlet and the creek bank will need be well protected. The direct discharge to Wildcat Creek will add the requirement for a construction in a floodway permit to the project. The proposed work along the creek bank will be regulated by the Indiana Department of Natural Resources through that permit process. Although both alternatives may require permits from the Indiana Department of Environmental Management and the United States Army Corps of Engineers, it is expected that permitting for a new discharge pipe into the South Fork of Wildcat Creek would result in a greater degree of scrutiny and possibly more stringent project requirements when compared to utilizing the existing open ditch.

The closed pipe system route would require easements as discussed for the open-ditch alternative. The difference would be that the easements would not be as wide for this alternative. Review of Tippecanoe County's GIS parcel information indicates as many as 9 landowners could be involved in the easement acquisition. Again, the farm fields in the upstream reaches are listed as being owned by Stanley W. Bull and will be the most

impacted lands adjoining the project. The different alignment means that the easements, although requiring less acreage would be in a location not already encumbered by drainage features. This fact may make the pipe route less desirable to the primary landowner. Once completed, the pipe would present no impact to the farming operation unless a significant maintenance activity were to be required. The estimated construction cost for this alternative is approximately $1,200,000.00.

CONCLUSIONS AND RECOMMENDATIONS

The Capital Improvement Plan estimated that the construction cost for the closed pipe alternative was $70,000.00 more than the open ditch alternative. Further, the closed pipe alternative was recommended as a better solution for the small estimated increase in construction cost. This update has determined that the additional cost for pipe construction is more likely $375,000.00. The closed pipe option remains valid and would still be expected to provide long term economic value. The town will have to consider the trade-offs between immediate impacts of higher up-front costs as compared to long term benefit of reduced maintenance. Since so much of the project is planned to be located on a single landowners property an initial discussion with the owner may help determine the route based on landowner preference.

The field visit that was previously noted also identified that the flat slopes and limited depth in the upstream reaches of the flow-path may in fact traverse through wetlands. At this time, the existence of wetlands does not appear to be a factor in selecting the open ditch versus the closed pipe alternatives. It is however recommended that an investigation take place to determine if wetlands are present at the site. The investigation should take place early in the project development process to minimize or eliminate surprises and unexpected cost increases. Wetland delineations can only be performed when plant life is actively growing. We generally observe the available time in Indiana as being between mid-April and mid-October.

Both alternatives represent a reasonable approach to solving the problem; however, the open-ditch alternative is recommended as first choice due to estimated cost and the fact that it already serving the desired purpose.

DRAWINGS

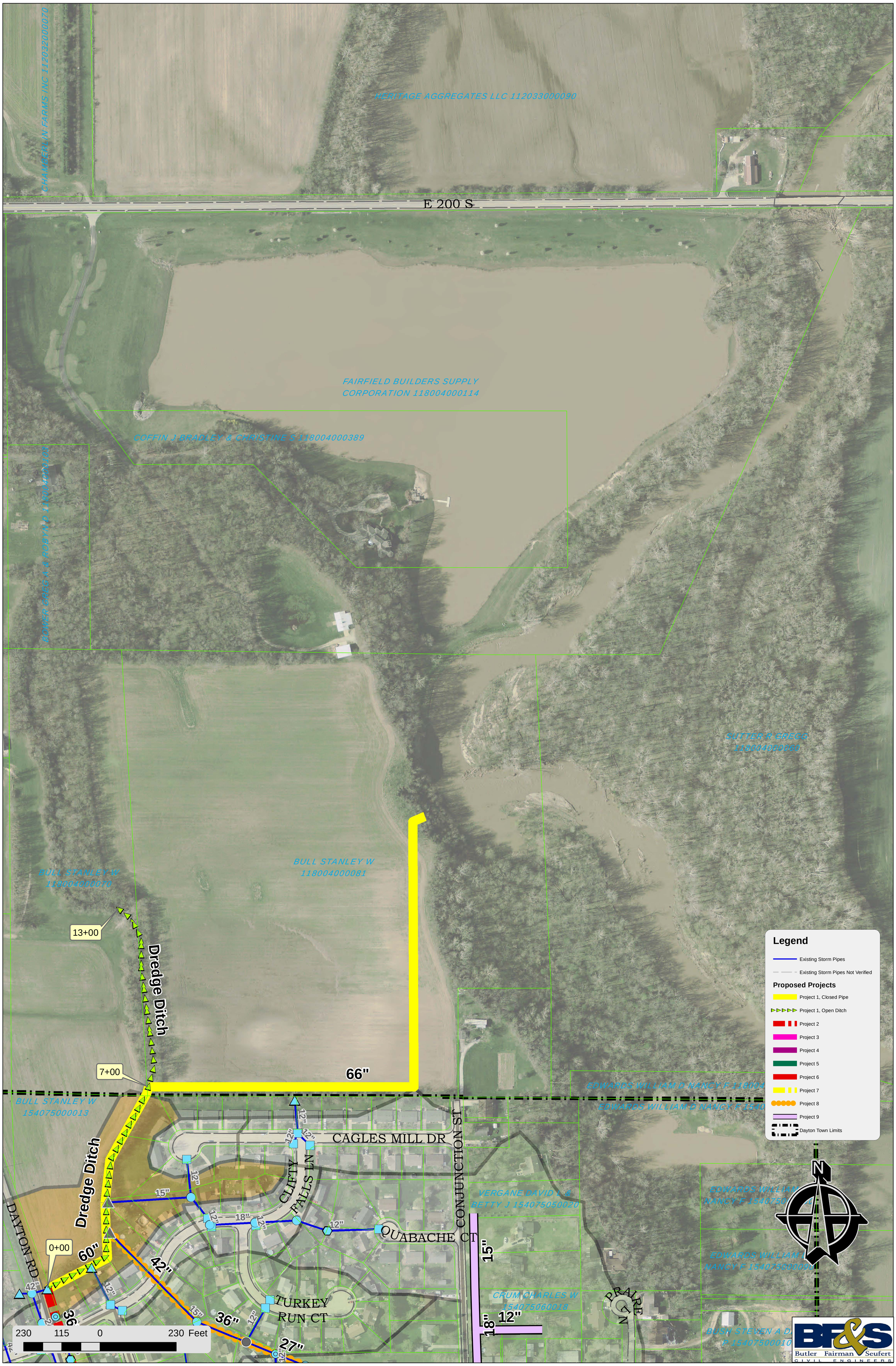
CHAMBERLIN FARMS INC 112032000070
HERITAGE AGGREGATES LLC 112033000090
E 200 S
FAIRFIELD BUILDERS SUPPLY
CORPORATION 118004000114
COFFIN J BRADLEY & CHRISTINE S 118004000389
BOWER GREG A & ROBYN D 118004000198
SUTTER R GREGG
118004000060
BULL STANLEY W
118004000081
BULL STANLEY W
118004000070
13+00
Dredge Ditch
7+00
66"
BULL STANLEY W
154075000013
Dredge Ditch
CAGLES MILL DR
CLIFTY FALLS LN
CONJUNCTION ST
QUABACHE CT
TURKEY RUN CT
DAYTON RD
0+00
60"
42"
36"
27"
15"
18"
12"
VERGANE DAVID L &
BETTY J 154075050020
CRUM CHARLES W
154075060018
PRAIRIE LN
EDWARDS WILLIAM D NANCY F 118004
EDWARDS WILLIAM D NANCY F 1540
EDWARDS WILLIAM
NANCY F 1540750
EDWARDS WILLIAM
NANCY F 154075000090
BUSH STEVEN A D
P 154075000100
Legend
Existing Storm Pipes
Existing Storm Pipes Not Verified
Proposed Projects
Project 1, Closed Pipe
Project 1, Open Ditch
Project 2
Project 3
Project 4
Project 5
Project 6
Project 7
Project 8
Project 9
Dayton Town Limits
N
230 115 0 230 Feet
BF&S
Butler Fairman Seufert
CIVIL ENGINEERS

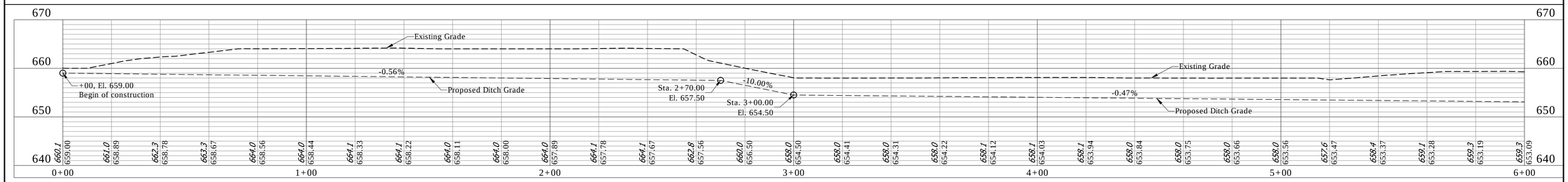

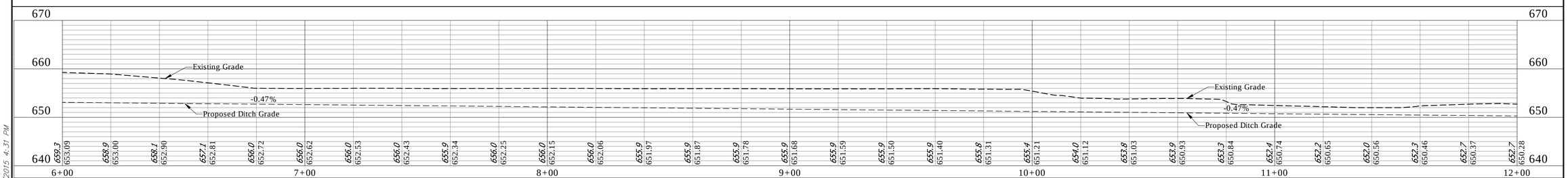

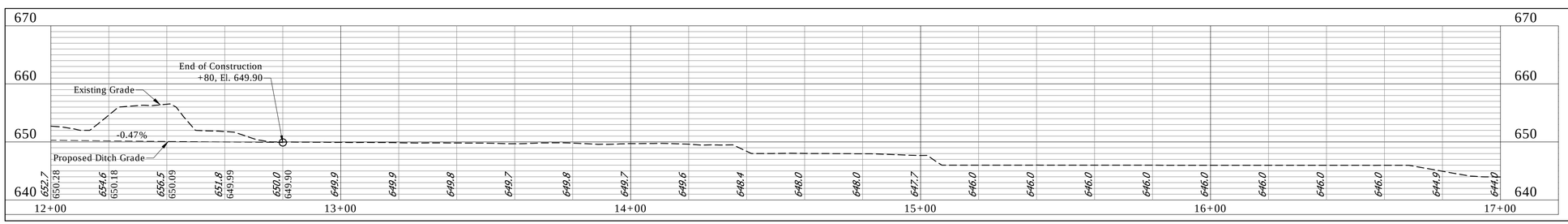

U:\4706\9814\ProDevelopment\Design\Drawings\KFP Profiles.dwg Jeff Ticen Plot:6/1/2015 4:37 PM Save:6/1/2015 4:31 PM

RECOMMENDED
FOR APPROVAL: _____
DESIGN ENGINEER DATE

DESIGNED: _____ DRAWN: _____

CHECKED: _____ CHECKED: _____

PLAN AND PROFILES

Headquarters
8450 WESTFIELD BLVD., SUITE 300
INDIANAPOLIS, IN. 46240-8302
TEL 317-713-4615
FAX 317-713-4616
www.BFSEngr.com

BF&S
Butler Fairman & Seufert
CIVIL ENGINEERS

Branch Locations
FORT WAYNE 260-459-1532
JEFFERSONVILLE 812-285-0590
LAFAYETTE 765-423-5602
MERRILLVILLE 219-769-2333
PLAINFIELD 317-839-3242

HORIZONTAL SCALE	BRIDGE FILE
1"=20'	
VERTICAL SCALE	DESIGNATION
1"=10'	
SURVEY BOOK	SHEET
	---- OF
CONTRACT	PROJECT

BFS NO. 4706-9808

CROSS SECTIONS

SCALE: 1" = 5'

CUT ℄ FILL

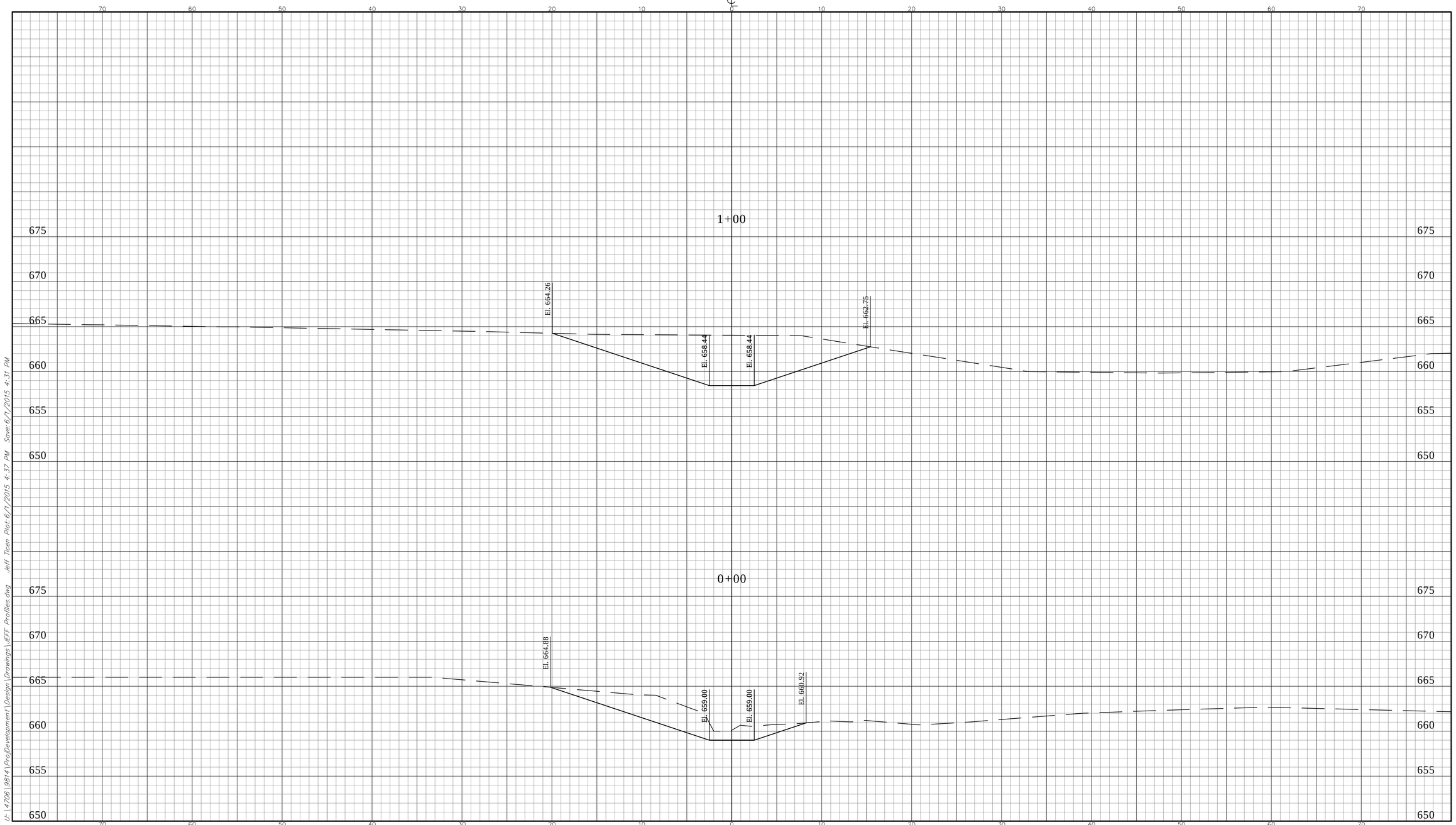

U:\4706\9814\ProDevelopment\Design\Drawings\JEFF Profiles.dwg Jeff Tice Plot:6/1/2015 4:37 PM Save:6/1/2015 4:31 PM

CROSS SECTIONS LINE " "	CAPITAL PLAN UPDATE OPEN DITCH ALTERNATIVE	HORIZONTAL SCALE: 1" = 5'	BRIDGE FILE
		VERTICAL SCALE: 1" = 5'	DESIGNATION
DESIGNED:	DRAWN:	SURVEY BOOK	SHEET 1 OF
CHECKED:	CHECKED:	CONTRACT	PROJECT

Headquarters
8450 WESTFIELD BLVD., SUITE 300
INDIANAPOLIS, IN. 46240-8302
TEL 317-713-4615
FAX 317-713-4616
www.BFSEngr.com

Butler Fairman & Seufert CIVIL ENGINEERS

Branch Locations
FORT WAYNE 260-459-1532
JEFFERSONVILLE 812-285-0590
LAFAYETTE 765-423-5602
MERRILLVILLE 219-769-2333
PLAINFIELD 317-839-3242

BFS NO. 4706-9808

CROSS SECTIONS

SCALE: 1" = 5'

CUT | FILL

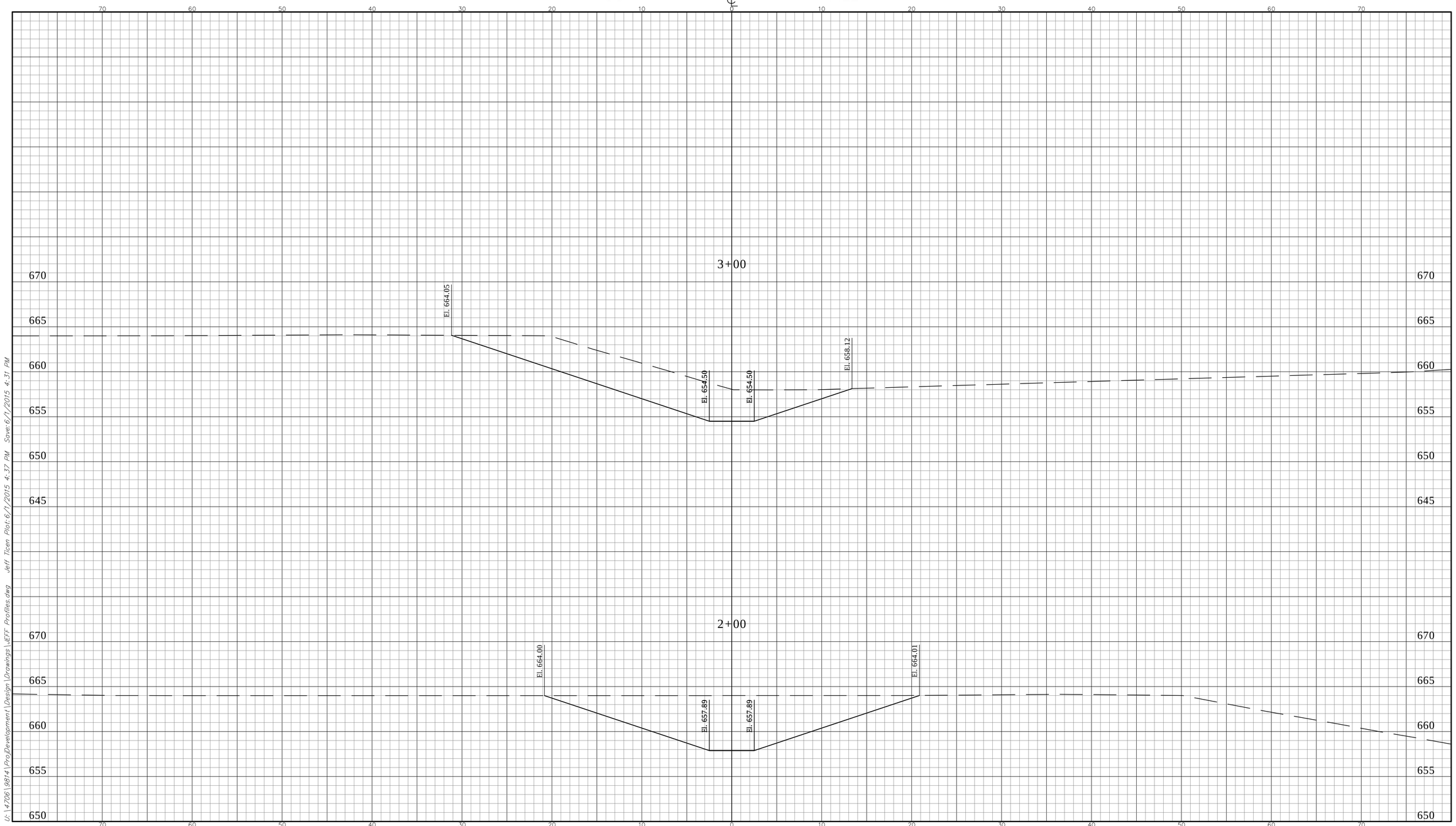

U:\4706\9814\ProDevelopment\Design\Drawings\JEFF Profiles.dwg Jeff Ticen Plot:6/1/2015 4:37 PM Save:6/1/2015 4:31 PM

CROSS SECTIONS LINE " "	CAPITAL PLAN UPDATE OPEN DITCH ALTERNATIVE	HORIZONTAL SCALE: 1" = 5'	BRIDGE FILE
		VERTICAL SCALE: 1" = 5'	DESIGNATION
DESIGNED:	DRAWN:	SURVEY BOOK	SHEET 2 OF
CHECKED:	CHECKED:	CONTRACT	PROJECT

Headquarters
8450 WESTFIELD BLVD., SUITE 300
INDIANAPOLIS, IN. 46240-8302
TEL 317-713-4615
FAX 317-713-4616
www.BFSEngr.com

Butler Fairman & Seufert CIVIL ENGINEERS

Branch Locations
FORT WAYNE 260-459-1532
JEFFERSONVILLE 812-285-0590
LAFAYETTE 765-423-5602
MERRILLVILLE 219-769-2333
PLAINFIELD 317-839-3242

BFS NO. 4706-9808

CROSS SECTIONS

SCALE: 1" = 5'

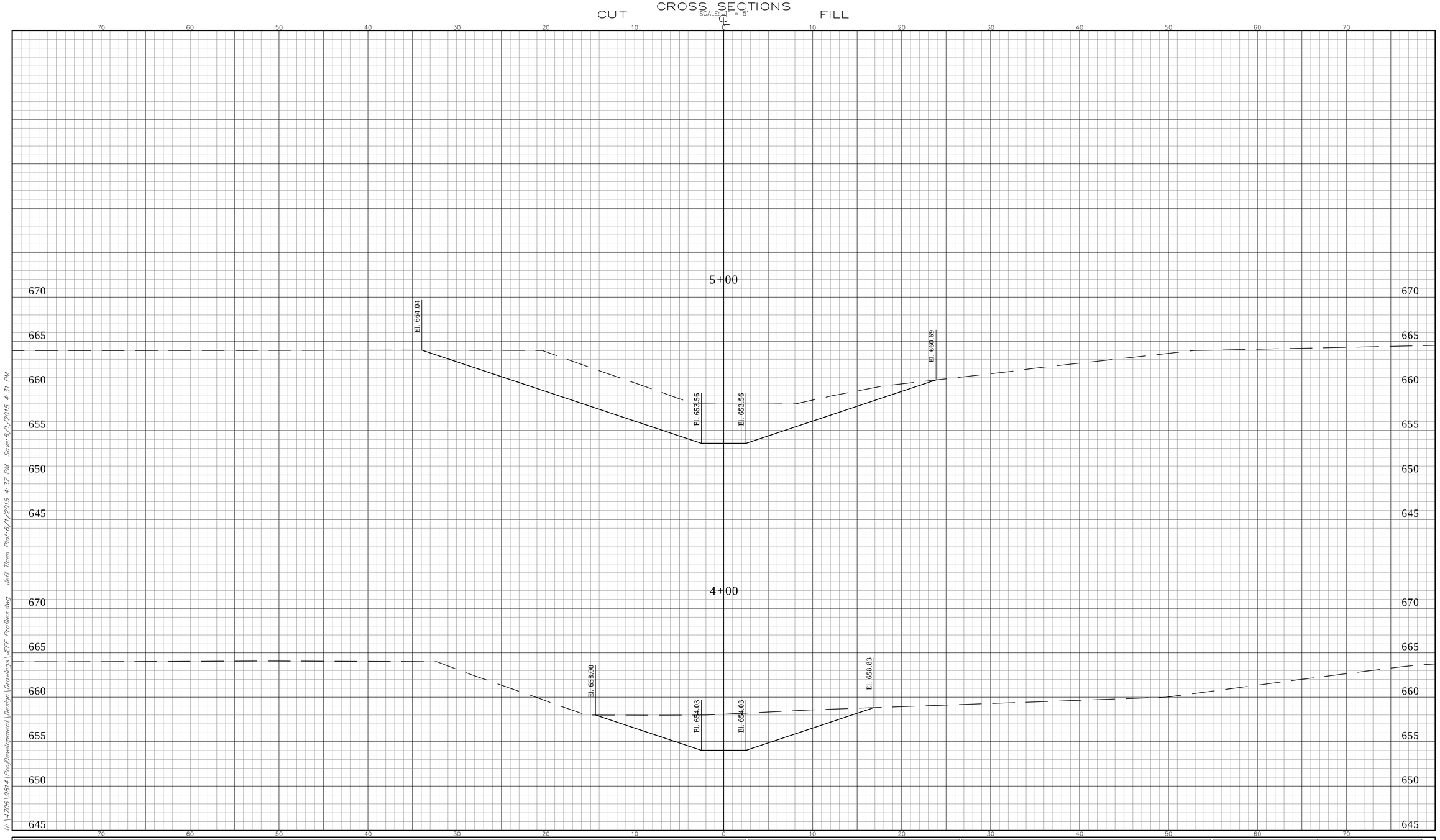

U:\4706\9814\ProDevelopment\Design\Drawings\JEFF Profiles.dwg Jeff Tice Plot:6/1/2015 4:37 PM Save:6/1/2015 4:31 PM

CROSS SECTIONS LINE " "	CAPITAL PLAN UPDATE OPEN DITCH ALTERNATIVE	HORIZONTAL SCALE: 1" = 5'	BRIDGE FILE
		VERTICAL SCALE: 1" = 5'	DESIGNATION
DESIGNED:	DRAWN:	SURVEY BOOK	SHEET 3 OF
CHECKED:	CHECKED:	CONTRACT	PROJECT

Headquarters
8450 WESTFIELD BLVD., SUITE 300
INDIANAPOLIS, IN. 46240-8302
TEL 317-713-4615
FAX 317-713-4616
www.BFSEngr.com

Butler Fairman & Seufert
CIVIL ENGINEERS

Branch Locations
FORT WAYNE 260-459-1532
JEFFERSONVILLE 812-285-0590
LAFAYETTE 765-423-5602
MERRILLVILLE 219-769-2333
PLAINFIELD 317-839-3242

BFS NO. 4706-9808

CROSS SECTIONS

SCALE: 1" = 5'

CUT | FILL

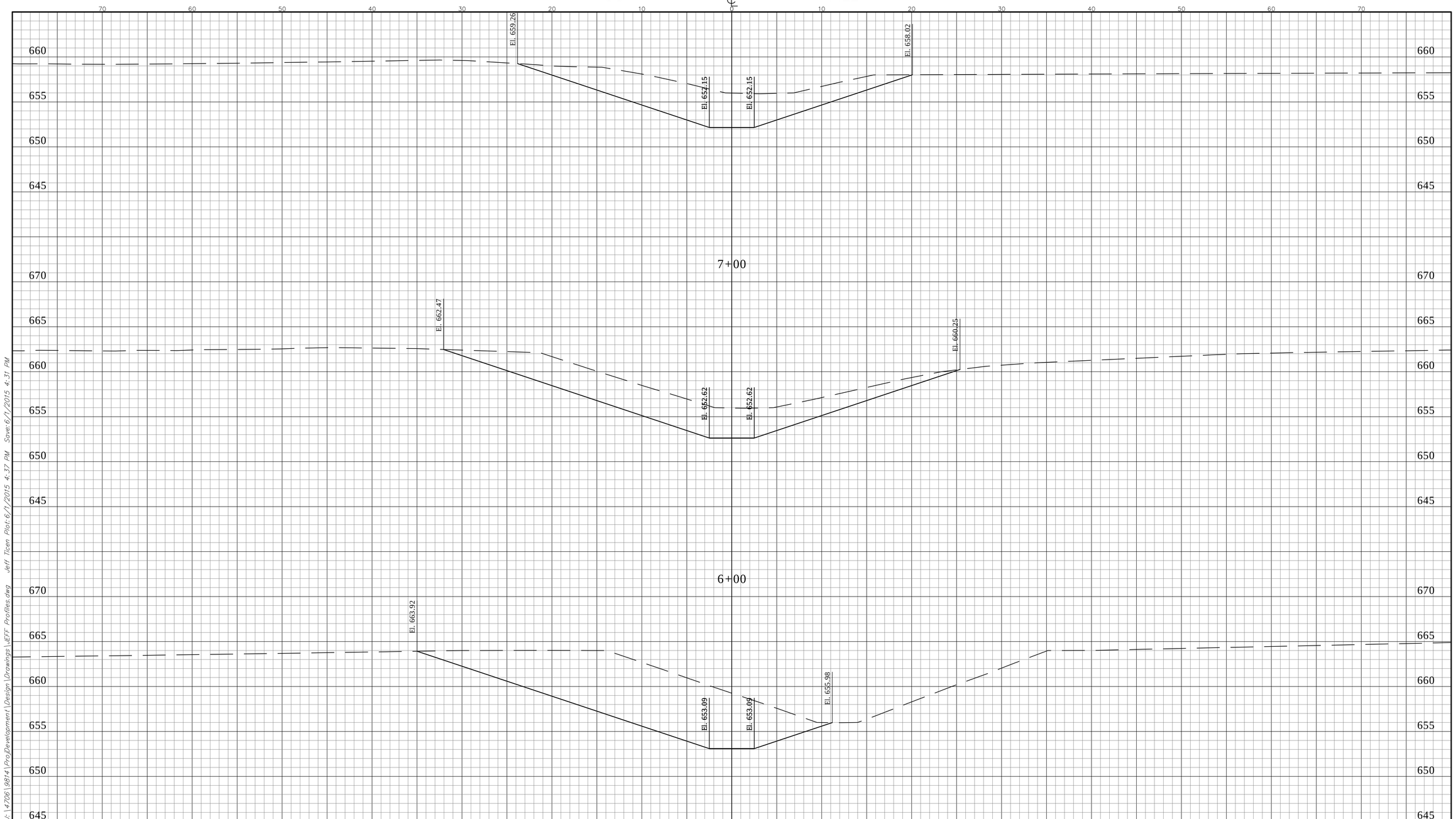

U:\4706\9814\ProDevelopment\Design\Drawings\JEFF Profiles.dwg Jeff Ticen Plot:6/1/2015 4:37 PM Save:6/1/2015 4:31 PM

CROSS SECTIONS LINE " "	CAPITAL PLAN UPDATE OPEN DITCH ALTERNATIVE	HORIZONTAL SCALE: 1" = 5'	BRIDGE FILE
		VERTICAL SCALE: 1" = 5'	DESIGNATION
DESIGNED: ____ DRAWN: ____	Headquarters 8450 WESTFIELD BLVD., SUITE 300 INDIANAPOLIS, IN. 46240-8302 TEL 317-713-4615 FAX 317-713-4616 www.BFSEngr.com	Branch Locations FORT WAYNE 260-459-1532 JEFFERSONVILLE 812-285-0590 LAFAYETTE 765-423-5602 MERRILLVILLE 219-769-2333 PLAINFIELD 317-839-3242	SURVEY BOOK / SHEET 4 OF
CHECKED: ____ CHECKED: ____	Butler Fairman & Seufert CIVIL ENGINEERS		CONTRACT / PROJECT

BFS NO. 4706-9808

CROSS SECTIONS

SCALE: 1" = 5'

CUT ℄ FILL

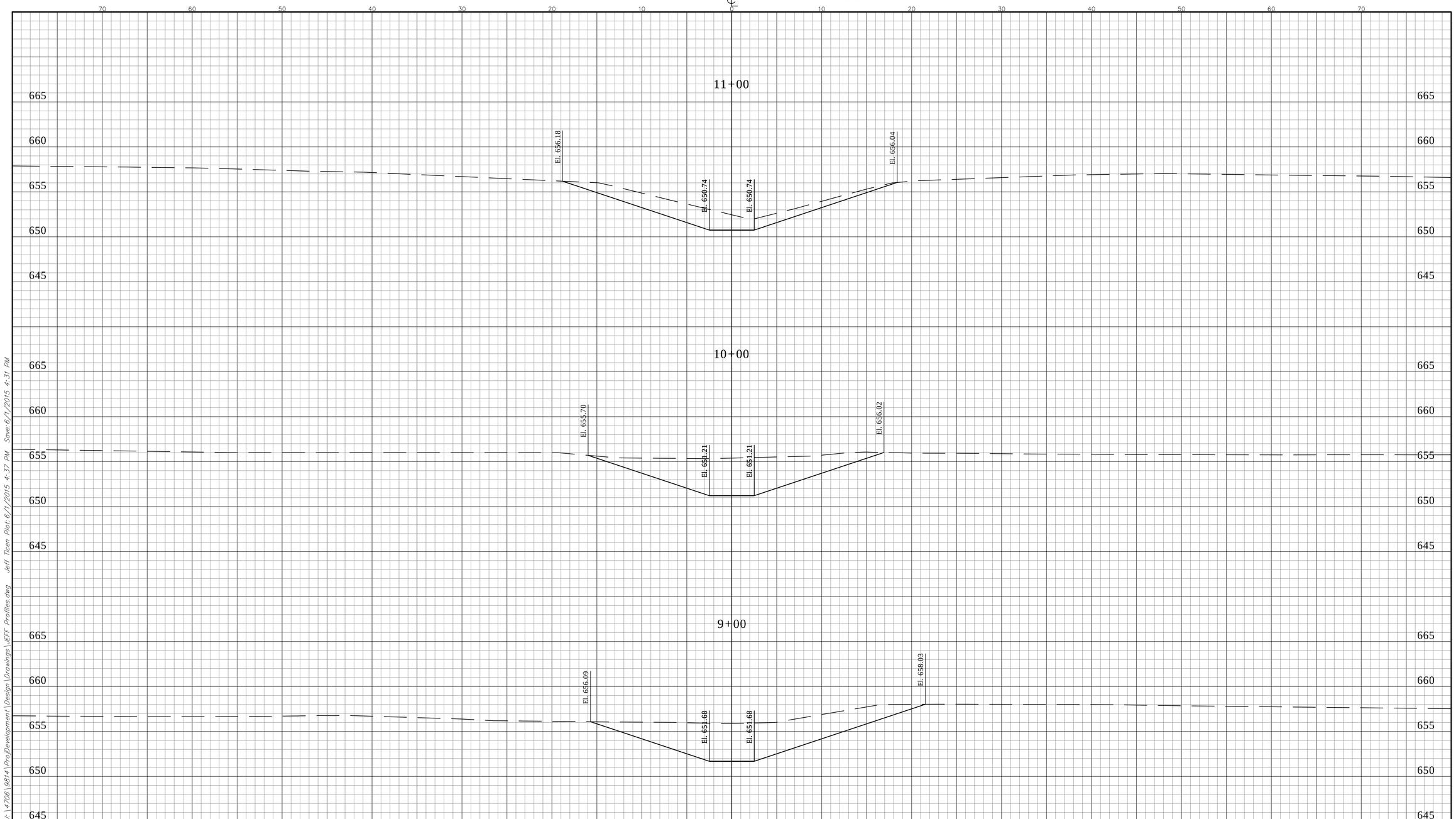

U:\4706\9814\ProDevelopment\Design\Drawings\JEFF Profiles.dwg Jeff Ticen Plot:6/1/2015 4:37 PM Save:6/1/2015 4:31 PM

CROSS SECTIONS LINE " "	CAPITAL PLAN UPDATE OPEN DITCH ALTERNATIVE	HORIZONTAL SCALE: 1" = 5' VERTICAL SCALE: 1" = 5'	BRIDGE FILE DESIGNATION
DESIGNED: ____ DRAWN: ____ CHECKED: ____ CHECKED: ____	Headquarters 8450 WESTFIELD BLVD., SUITE 300 INDIANAPOLIS, IN. 46240-8302 TEL 317-713-4615 FAX 317-713-4616 www.BFSEngr.com	Butler Fairman & Seufert CIVIL ENGINEERS Branch Locations FORT WAYNE 260-459-1532 JEFFERSONVILLE 812-285-0590 LAFAYETTE 765-423-5602 MERRILLVILLE 219-769-2333 PLAINFIELD 317-839-3242	SURVEY BOOK CONTRACT SHEET 5 OF PROJECT

BFS NO. 4706-9808

CROSS SECTIONS

SCALE: 1" = 5'

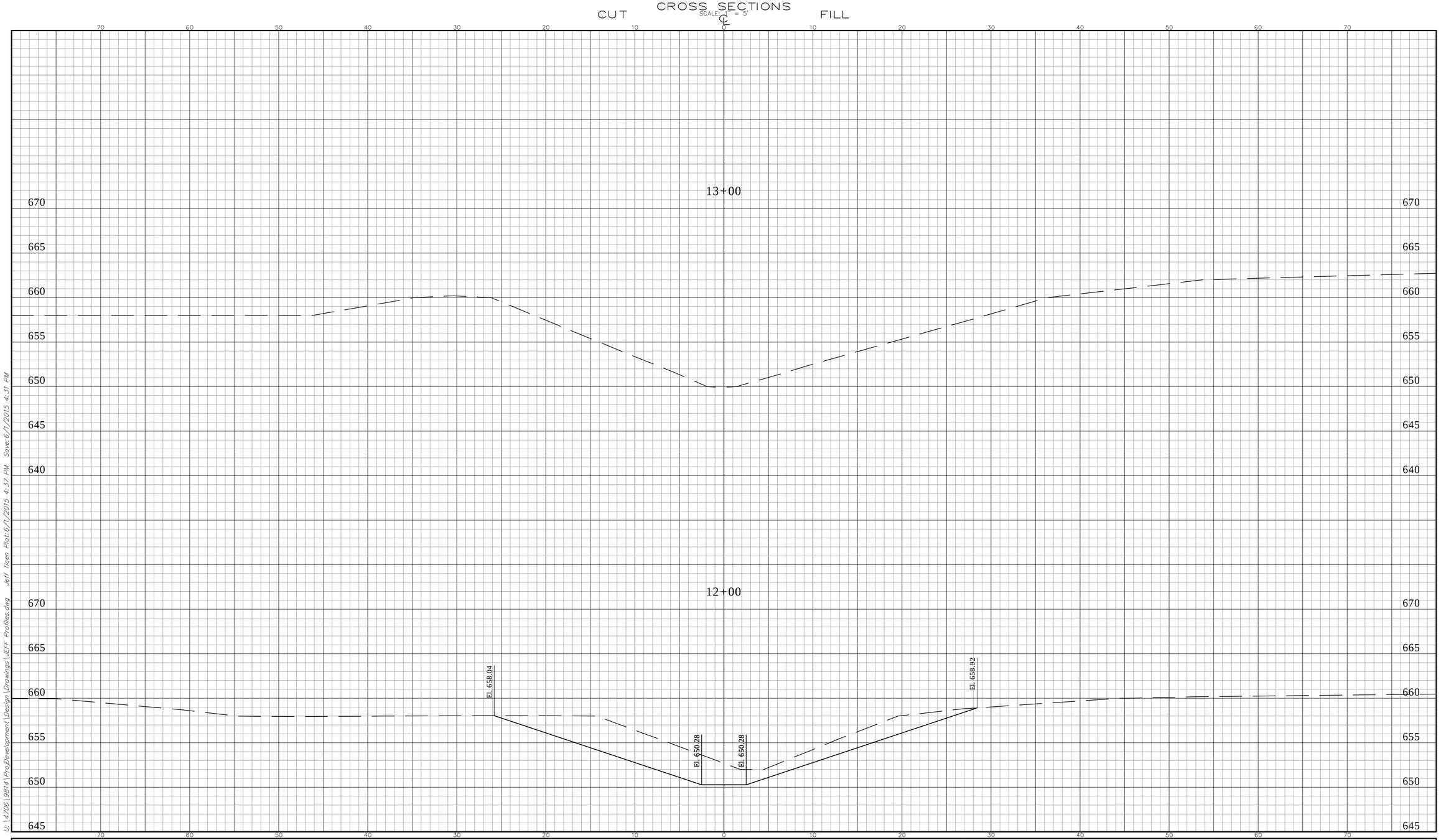

U:\4706\9814\ProDevelopment\Design\Drawings\JEFF Profiles.dwg Jeff Ticen Plot:6/1/2015 4:37 PM Save:6/1/2015 4:31 PM

CROSS SECTIONS LINE " "	CAPITAL PLAN UPDATE OPEN DITCH ALTERNATIVE	HORIZONTAL SCALE: 1" = 5'	BRIDGE FILE
		VERTICAL SCALE: 1" = 5'	DESIGNATION
DESIGNED: ____ DRAWN: ____	Headquarters 8450 WESTFIELD BLVD., SUITE 300 INDIANAPOLIS, IN. 46240-8302 TEL 317-713-4615 FAX 317-713-4616 www.BFSEngr.com	SURVEY BOOK	SHEET 6 OF
CHECKED: ____ CHECKED: ____	Butler Fairman & Seufert CIVIL ENGINEERS	CONTRACT	PROJECT

Branch Locations
FORT WAYNE 260-459-1532
JEFFERSONVILLE 812-285-0590
LAFAYETTE 765-423-5602
MERRILLVILLE 219-769-2333
PLAINFIELD 317-839-3242

BFS NO. 4706-9808

APPENDIX A

Weir-Screen in channel Back of Prestwick

Blocked Flowpath between Weir & Dayton Road

Blocked Flowpath between Weir & Dayton Road - 1

Upstream @ Field Crossing

Upstream @ Field Crossing - 1

Upstream @ Field Crossing - 2

Culvert Entrance Coffin Lake

Outlet to Coffin Lake

APPENDIX B

Stormwater Capital Improvement Plan

Town of Dayton

PROJECT: Stormwater Capital Improvements - Project 1 Update
Open Ditch Alternative

				Engineers Estimate	
				Unit	Extended
Item No.	Description	Quantity	Unit	Price	Price
1.0	Mobilization and Demobilization	1	LS	$39,000.00	$39,000.00
2.0	Construction Engineering	1	LS	$18,000.00	$18,000.00
3.0	Erosion Control	1	LS	$22,000.00	$22,000.00
4.0	Clearing Right of Way	1	LS	$75,000.00	$75,000.00
5.0	Tree Mitigation	1	LS	$125,000.00	$125,000.00
6.0	Ditch Excavation	7,500	CYS	$10.00	$75,000.00
7.0	Culvert Replacement	60	LFT	$1,000.00	$60,000.00
8.0	Bank Stabilization (Heavy)	1,000	SYS	$250.00	$250,000.00
9.0	Bank Stabilization (Moderate)	2,000	SYS	$25.00	$50,000.00
9.0	RipRap,Revetment	250	TON	$40.00	$10,000.00
10.0	Pipe End Section	3	EACH	$500.00	$1,500.00
11.0	Mulched Seeding	4,500	SYS	$2.00	$9,000.00
12.0	Project Contingency	1	LS	$73,000.00	$73,000.00

Construction Sub-total	$808,000.00
Estimated Non-Construction Costs	$242,000.00
Total Project Cost (Estimated)*	**$1,050,000.00**

Stormwater Capital Improvement Plan

Town of Dayton

PROJECT: Stormwater Capital Improvements - Project 1 Update
Closed Pipe Alternative

				Engineers Estimate	
				Unit	Extended
Item No.	Description	Quantity	Unit	Price	Price
1.0	Mobilization and Demobilization	1	LS	$55,000.00	$55,000.00
2.0	Construction Engineering	1	LS	$18,000.00	$18,000.00
3.0	Erosion Control	1	LS	$22,000.00	$22,000.00
4.0	Clearing Right of Way	1	LS	$30,000.00	$30,000.00
5.0	Tree Mitigation	1	LS	$45,000.00	$45,000.00
6.0	Minor Storm Connection	6	EA	$1,000.00	$6,000.00
7.0	66" Concrete Storm Sewer	2,500	LFT	$260.00	$650,000.00
8.0	12" PVC Storm Sewer	150	LFT	$60.00	$9,000.00
9.0	Manhole, 96"	4	EA	$7,500.00	$30,000.00
10.0	Manhole, 84"	6	EA	$6,500.00	$39,000.00
11.0	Concrete Headwall	1	LS	$35,000.00	$35,000.00
12.0	Bank Stabilization (Heavy)	500	SYS	$250.00	$125,000.00
13.0	RipRap, Revetment	250	TON	$40.00	$10,000.00
14.0	Mulched Seeding,	1,700	SYS	$1.00	$1,700.00
15.0	Project Contingency	1	LS	$108,000.00	$108,000.00

Construction Sub-total	$1,184,000.00
Estimated Non-Construction Costs	$355,000.00
Total Project Cost (Estimated)*	**$1,539,000.00**